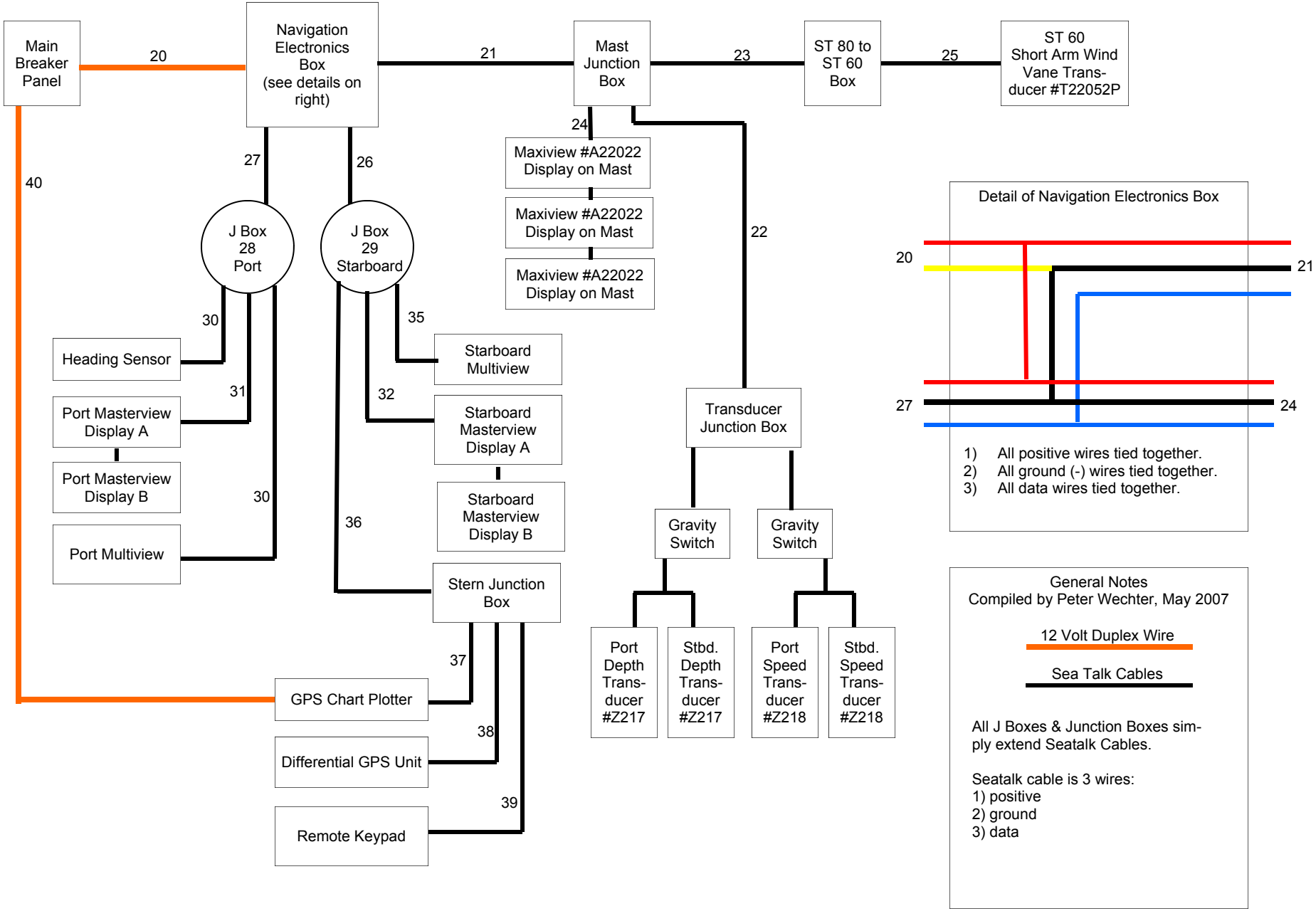
Main Breaker Panel
20
Navigation Electronics Box (see details on right)
21
Mast Junction Box
23
ST 80 to ST 60 Box
25
ST 60 Short Arm Wind Vane Trans-ducer #T22052P
24
Maxiview #A22022 Display on Mast
Maxiview #A22022 Display on Mast
Maxiview #A22022 Display on Mast
22
40
27
26
J Box 28 Port
J Box 29 Starboard
30
35
Heading Sensor
Starboard Multiview
31
32
Port Masterview Display A
Starboard Masterview Display A
Port Masterview Display B
Starboard Masterview Display B
30
36
Port Multiview
Stern Junction Box
Transducer Junction Box
Gravity Switch
Gravity Switch
37
GPS Chart Plotter
38
Differential GPS Unit
39
Remote Keypad
Port Depth Trans-ducer #Z217
Stbd. Depth Trans-ducer #Z217
Port Speed Trans-ducer #Z218
Stbd. Speed Trans-ducer #Z218
Detail of Navigation Electronics Box
20
21
27
24
1) All positive wires tied together.
2) All ground (-) wires tied together.
3) All data wires tied together.
General Notes
Compiled by Peter Wechter, May 2007
12 Volt Duplex Wire
Sea Talk Cables
All J Boxes & Junction Boxes sim-ply extend Seatalk Cables.
Seatalk cable is 3 wires:
1) positive
2) ground
3) data